IP65 LED RECHARGEABLE FLOODLIGHTS

BOTH FITTINGS: Yellow / 240/12V (Charging Options) / 6000K / 30,000 hrs / IP65

Eterna LED 2 YEAR Warranty Subject to T&C's

- 10W: 2 x 2,200 mah capacity battery
- 20W: 4 x 2,200 mah connected in parallel = 4,400 mah capacity
- 4 hours illumination on 100% setting / 6 hours illumination on 60% setting (with full charge)
- Charge times from full discharge are as follows:
  10W: 4 hours (mains charger) / 6 hours (car charger)
  20W: 5 hours (mains charger) / 6 hours (car charger)
- 2 lighting levels available: full power and 60% energy saving option
- Insulated handle grip • Safety glass cover
- IP65: enables internal and external use
- Floodlight tilts up and down on the stand and can be rotated 360° horizontally
- The switch has three settings: 0 = OFF
  I = 60% Light Output • II = 100% Light Output
  The 60% setting will increase how long the light remains illuminated
- **10W:** M.O.M: 1 / O.P.Q: 20
- **20W:** M.O.M: 1 / O.P.Q: 10

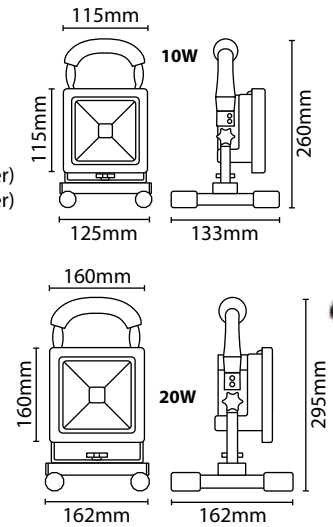

Comes complete with mains charger and car charger

Code	Wattage	Luminaire Lumens	Energy Rating
RCFLOOD10	10W	600 lm	A+
RCFLOOD20	20W	1450 lm	A

PLASTIC GROUND SPIKE

COMPATIBLE WITH ETERNA TAB & POLY RANGES

Code
POLYSPIKE

- M.O.M: 1 / O.P.Q: 168

HORIZONTAL BRACKET

COMPATIBLE WITH ETERNA ELEDFLD, ELEDFPIR, TAB & POLY RANGES

Code
HORBRACKET

- M.O.M: 1 / O.P.Q: 250